LP SERIES-GENERAL PURPOSE

LP12-140 (12V140Ah)

LEOCH BATTERY

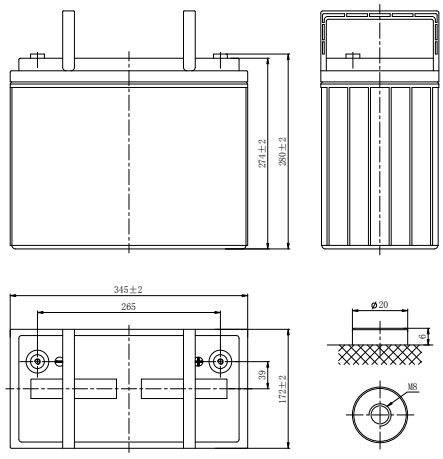

T11

CHARACTERISTICS

Item		Specifications
Rated Voltage		12V
Nominal Capacity (25˚C)	C_{10},1.80V/cell	140Ah
Dimension	Length	345mm (13.6inches)
	Width	172mm (6.77inches)
	Container Height	274mm (10.8inches)
	Total Height	280mm (11.0inches)
Approx Weight		42.1kg (92.8lbs)
Terminal		T11(M8)
Container Material		ABS (UL94 HB or V-0 optional)
Short-circuit current		2800A
Internal Resistance (25˚C)		Approx 4.5 mΩ (Fully charged)
Operating Temp. Range	Discharge	-15~50˚C (5~122°F)
	Charge	-20~40˚C (-4~104°F)
	Storage	-15~40˚C (5~104°F)
Nominal Operating Temp. Range		25±3˚C (77±5°F)
Max.Charging Current (25˚C)		0.3C
Charge voltage (25˚C)	Standby Use	Cycle Use
	2.25-2.30V/cell	2.35-2.40V/cell
Temp. Coeffcient	-3mV/cell/˚C	-5mV/cell/˚C
Effect of temp. to Capacity	40˚C (104°F)	103%
	25˚C (77°F)	100%
	0˚C (32°F)	86%
Self Discharge	≤3% per month at 25°C (77°F). LP series batteries may be stored up to 6 months at 25°C (77°F) and then a freshening charge is required. For higher temperatures the time interval will be shorter.	

DISCHARGE TABLE

Constant Current Discharge (Amperes) at 25°C (77°F)																
F.V/Time	5min	10min	15min	20min	30min	45min	1h	1.5h	2h	3h	4h	5h	6h	8h	10h	20h
1.85V/cell	279.8	198.9	172.5	135.6	123.7	90.5	76.6	55.5	46.7	34.3	26.9	23.3	20.6	15.8	13.1	6.95
1.80V/cell	318.2	225.8	195.4	153.3	134.7	95.9	79.4	57.4	48.2	37.2	28.7	24.5	22.1	16.6	14.0	7.20
1.75V/cell	345.6	244.9	211.6	165.5	137.5	99.3	83.3	60.4	50.8	37.9	29.2	25.0	22.3	16.7	14.1	7.28
1.70V/cell	369.4	261.1	224.7	175.5	140.2	101.3	85.0	61.6	51.8	38.6	29.7	25.4	22.4	17.0	14.2	7.35
1.67V/cell	382.3	269.3	231.3	180.3	142.3	102.8	86.2	62.5	52.5	39.0	30.2	25.9	22.5	17.2	14.3	7.44
1.60V/cell	395.9	278.6	238.4	184.9	144.3	104.3	87.5	63.4	53.3	39.4	30.6	26.3	22.6	17.4	14.4	7.53
Constant Power Discharge (Watts/cell) at 25°C (77°F)																
F.V/Time	5min	10min	15min	20min	30min	45min	1h	1.5h	2h	3h	4h	5h	6h	8h	10h	20h
1.85V/cell	511.8	366.6	319.9	252.7	236.5	174.0	148.3	107.7	90.8	67.0	52.7	45.9	40.6	31.4	26.1	13.8
1.80V/cell	572.5	410.1	357.8	282.7	255.4	183.1	152.7	110.8	93.4	72.3	56.1	48.1	43.5	32.9	27.2	14.3
1.75V/cell	611.0	437.7	381.9	301.7	258.6	188.6	159.5	116.0	97.9	73.5	56.9	48.8	43.7	33.0	27.5	14.4
1.70V/cell	642.4	460.1	401.5	317.2	261.6	191.1	161.9	117.8	99.4	74.7	57.7	49.5	43.8	33.5	27.7	14.6
1.67V/cell	652.8	467.6	408.0	322.3	263.5	192.8	163.3	118.9	100.5	75.1	58.4	50.3	43.9	33.9	28.0	14.7
1.60V/cell	662.0	474.1	413.7	326.8	264.6	193.7	164.5	119.9	101.3	75.4	58.8	50.8	44.1	34.2	28.3	14.9

LP SERIES-GENERAL PURPOSE

LP12-140 (12V140Ah)

LEOCH BATTERY

APPLICATIONS

- All purpose
- Uninterruptable Power Supply (UPS)
- Electric Power System (EPS)
- Emergency backup power supply
- Alarm and security system
- Communication power supply
- DC power supply
- Auto control system

GENERAL FEATURES

- 10 years design life (25℃)
- Lead calcium alloy, sealed design, no watering required
- Puncture resistant micro-porous glass mat separators extend life
- Unique technology optimizes power capacity, cell consistency, and long-term reliability
- Designed for a wide range of applications

STANDARDS

- Compliance with IEC 60896 standards, EU Battery Directive
- UL,CE Approved
- Manufactured in Leoch®IATF 16949, ISO 45001, ISO 9001 and ISO 14001 certified production facilities

Discharge Characteristics

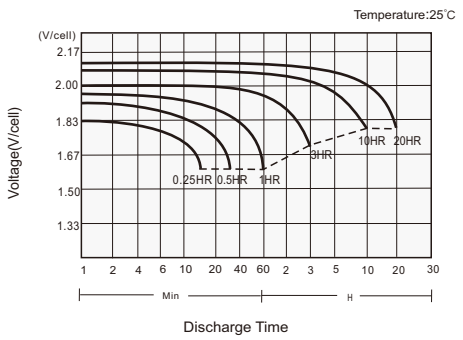

Charging Characteristics

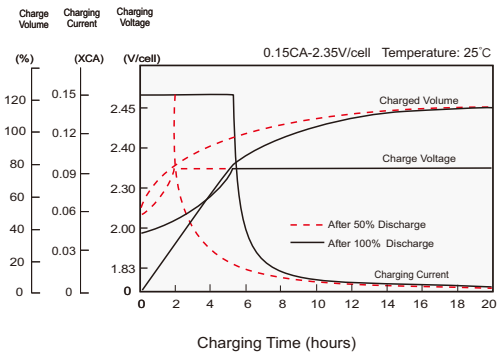

Effects of Temperature on Capacity

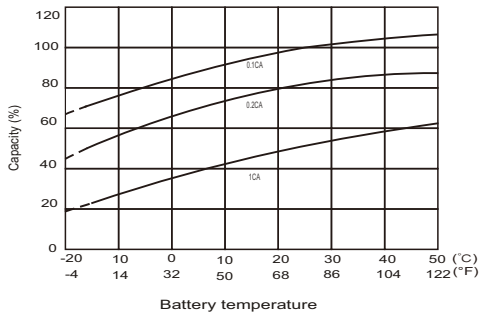

Self Discharge Characteristics

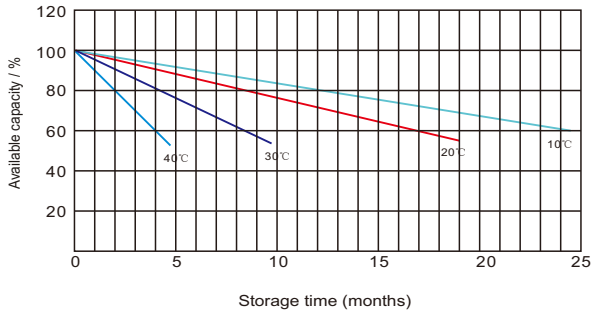

Leoch International Technology Ltd.
www.leoch.com

Leoch Batteries Pte Ltd
www.leoch.sg

Leoch Battery Corporation
www.leochamericas.com

Leoch Europe S.A.
www.leoch.eu

Data above is recommended and the picture is only for battery effect display, Leoch reserve the final right of explanation.
© LEOCH. All rights reserved.Trademarks and logos are the property of LEOCH and its affiliates unless otherwise noted.Subject to revisions without prior notice. E&OE.

Publication No.:LB-LP12-140-PD-EN-V2.0-20231228